Steeple Data

Base Width: 6'-0"
Steeple Height: 29'-0"
Weight: 1025 lb.
Two-piece Steeple unit

Available Options:

- 3' or 4' Aluminum Cross
- Lightning Protection
- Simulated Louvers
- Krinklglas Windows
- Round Venting Louvers In Base

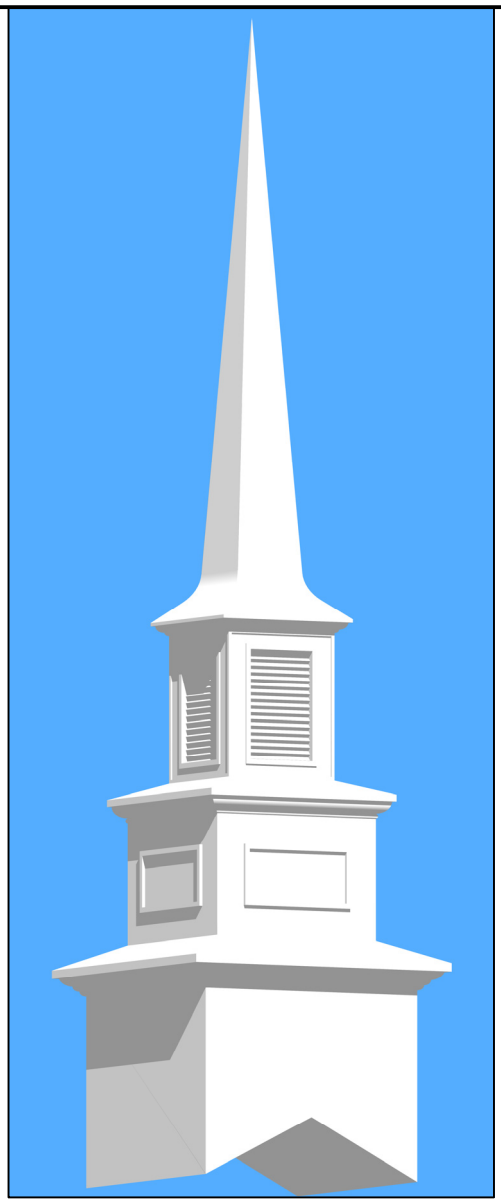

3-D VIEW

ALL STEEPLES MUST BE MOUNTED ON A COMPLETED WATERPROOF ROOF SYSTEM AS LONG-TERM INSURANCE AGAINST LEAKAGE .

Note: Steeple Tip will be reduced by approx. 14" when Adding Optional Cross

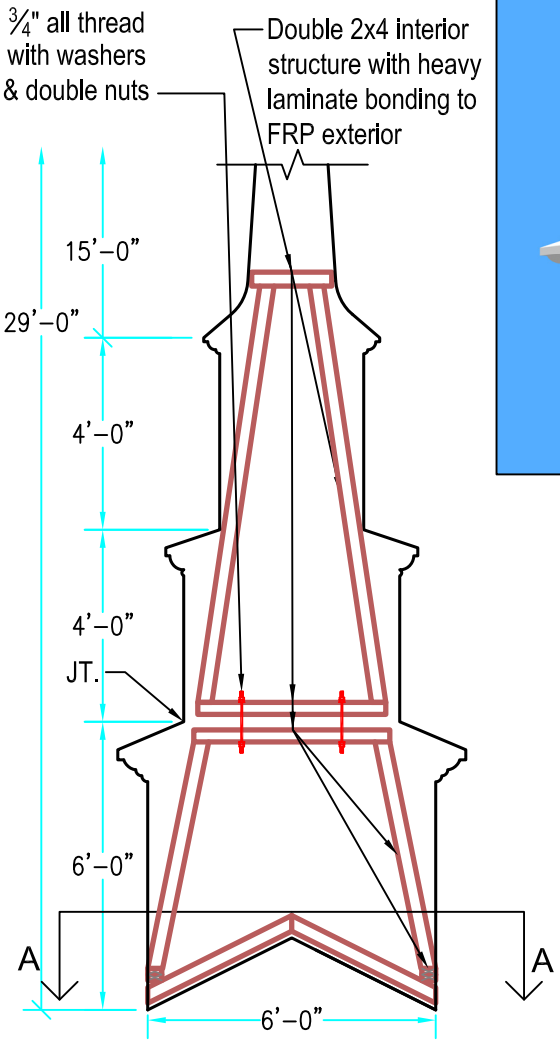

INTERIOR SUPPORT DETAIL

Scale: ¼" = 1'-0"

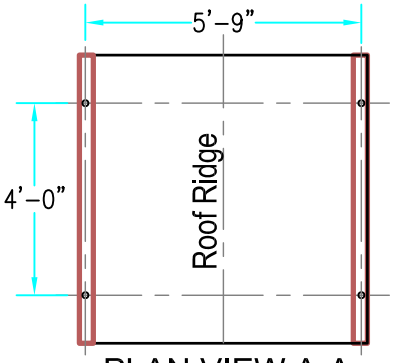

PLAN VIEW A-A

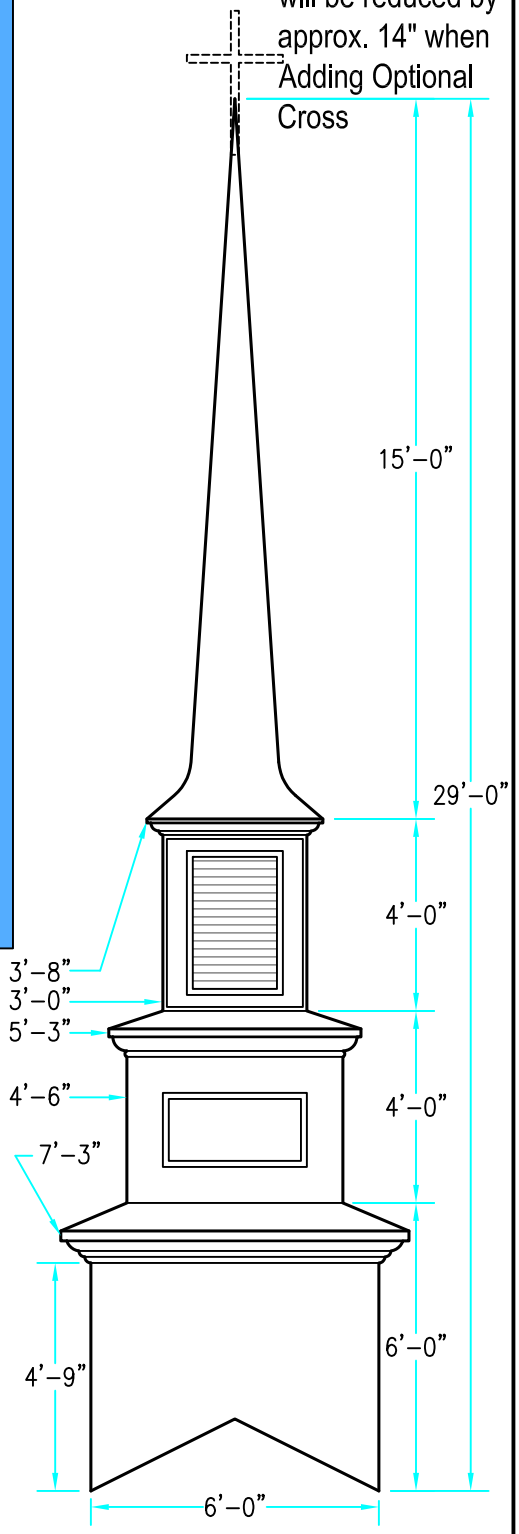

ELEVATION

Scale: ¼" = 1'-0"

Drawings are property of Fiberglass Unlimited, Inc.; Dimensions may change slightly to accommodate manufacturing.

STEEPLES
Model # 400

FIBERGLASS UNLIMITED, INC.
Phone: 1-800-837-6211 | Fax: 334-863-7975 | Email: info@FiberG.com
183 Industrial Ave.
Roanoke, Alabama 36274